Boring ToolHolder

Holder





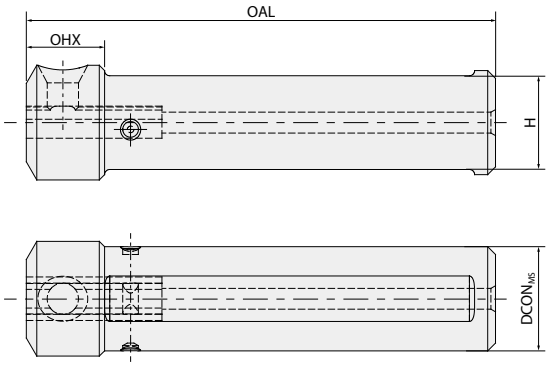

Scale	Insert Size ($DCON_{WS}$)	Designation	EDP	$DCON_{MS}$	OAL	H	OAH	OHX
Metric (mm)	4	NCHI - 12.4	ZBR0400012	12	70	10	15.5	14
		NCHI - 16.4	ZBR0400016	16	75	14	17.5	
		NCHI - 20.4	ZBR0400020	20	90	18	20	
		NCHI - 22.4	ZBR0400022	22	110	20	22	
		NCHI - 25.4	ZBR0400025	25	110	23	25	
	6	NCHI - 12.6	ZBR0600012	12	70	10	16.5	
		NCHI - 16.6	ZBR0600016	16	75	14	18.5	
		NCHI - 20.6	ZBR0600020	20	90	18	22	
		NCHI - 22.6	ZBR0600022	22	110	20	22	
		NCHI - 25.6	ZBR0600025	25	110	23	25	

Infomation	Screw	Wrench
Description	-	TPWFTP15
EDP	TP156075	18000003