Milling - High Feed Milling - Inserts

SDMT / W - High Feed Positive (4 Corners)

Refer to Milling Cutter p.217

Series	IC	S
SDM* 1204	12.7	4.7

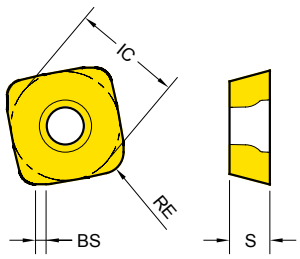

EDP 1200.. ●: Stock item ○: Order made item

SDMT SDMW	Designation	RE (mm)	Fz (mm/tooth)	BS (mm)	APMX (mm)	H20 P20	P15	P25	P30 K30	P30 M30 S30	P30 M30	P40 M40 S40	K10	K15	S40
						YG012	YG712	YG713	YG622	YG612	YG602	YG613	YG5020	YG501	YG904
-ST Stainless Steel Super Alloy 	SDMT 120420 - ST	1.9	0.60 - 1.20	1.45	1.8					● 0964	● 0274	● 0666			
SDMW Hard Materials 	SDMW 120420	1.9	0.60 - 1.40	1.4	1.8	● 0737		○ 0634	○ 0341	● 0827	● 0273	● 0691			

Technical Information

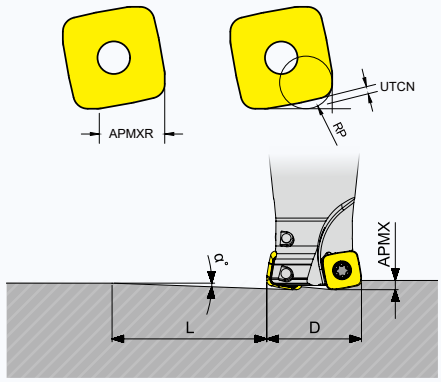

APMXR Radial AP Max	RP Programmed Corner R	UTCN Uncut Thickness
8.6	3.5	0.94

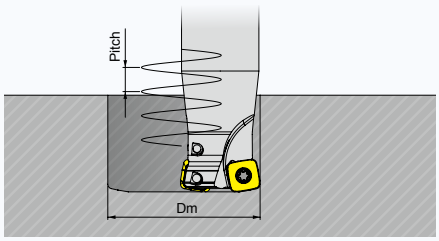

	Linear Ramping Data			
	D	α°	APMX	L (cutting length)
Metric	32	2.1	1.8	49
	33	2.0	1.8	52
	35	1.6	1.8	64
	40	2.7	1.8	38
	50	2.0	1.8	52
	63	1.4	1.8	74
	80	1.0	1.8	103
	100	0.8	1.8	129
	125	0.6	1.8	172
	160	0.4	1.8	258
Inch	1.25	2.4	0.071	0.067
	1.5	3.1	0.071	0.052
	2.0	2.0	0.071	0.080
	2.5	1.4	0.071	0.114
	3.0	1.1	0.071	0.145
	4.0	0.8	0.071	0.200
	5.0	0.6	0.071	0.266
	6.0	0.5	0.071	0.320

	Helical Interpolation Data				
	D	Dm (max)	Pitch	Dm (minimum)	Pitch
Metric	32	64	1.8	54	1.8
	33	66	1.8	56	1.8
	35	70	1.8	59	1.8
	40	80	1.8	69	1.8
	50	100	1.8	89	1.8
	63	126	1.8	115	1.8
	80	160	1.8	149	1.8
	100	200	1.8	189	1.8
	125	250	1.8	239	1.8
	160	320	1.8	309	1.8
Inch	1.25	2.5	0.071	2.1	0.071
	1.5	3	0.071	2.6	0.071
	2.0	4	0.071	3.6	0.071
	2.5	5	0.071	4.6	0.071
	3.0	6	0.071	5.6	0.071
	4.0	8	0.071	7.6	0.071
	5.0	10	0.071	9.6	0.071
	6.0	12	0.071	11.6	0.071