Milling - Shoulder Milling - Cutter

Cutters for APKT

Entering Angle : 90°
2 Corner Positive

<S> Shellmill

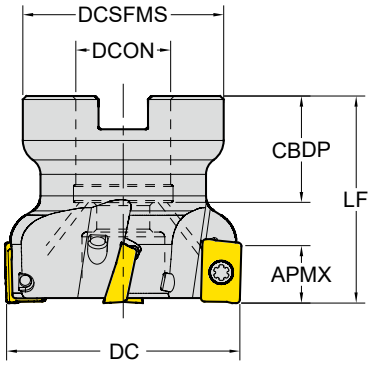

<W> Weldon

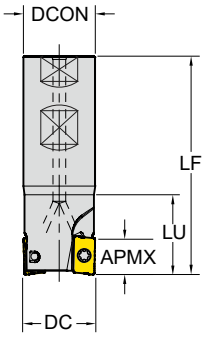

<M> Modular

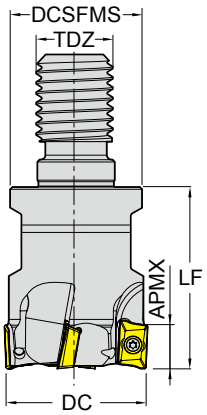

CICT : Number of Inserts
CBDP : Connection Bore Depth

: Refer to p. 171

Unit:mm

Series	APMX	Designation	EDP 1700..	DC	CICT	LU	LF	TYPE	DCON	CBDP	DCSFMS	
APKT 1003	9.0	E90 - APKT10 - D20Z3W20 - L100	0461	20	3	30	100	Weldon	20	-	-	●
		E90 - APKT10 - D20Z3W20 - L90	0084	20	3	40	90		20	-	-	●
		E90 - APKT10 - D22Z3W20 - L100	0544	22	3	30	100		20	-	-	●
		E90 - APKT10 - D25Z3W25 - L100	0545	25	3	30	100		25	-	-	●
		E90 - APKT10 - D25Z4W25 - L100	0546	25	4	30	100		25	-	-	●
		E90 - APKT10 - D32Z4W32 - L150 - WOC	0547	32	4	50	150		32	-	-	X
		F90 - APKT10 - D40Z4S16	0087	40	4	-	40	Shellmill	16	18	34	●
		F90 - APKT10 - D40Z5S16	0472	40	5	-	40		16	20	36	●
		F90 - APKT10 - D50Z6S22	0215	50	6	-	40		22	22	42	●
		F90 - APKT10 - D50Z7S22	0088	50	7	-	40		22	20	42	●
		F90 - APKT10 - D63Z7S22	0548	63	7	-	40		22	22	48	●
		F90 - APKT10 - D80Z8S27	0549	80	8	-	50		27	25	58	●
		F90 - APKT10 - D100Z9S32	0550	100	9	-	50		32	26	65	●
		M90 - APKT10 - D16Z2M08	0551	16	2	-	30	Modular	M08	-	14.75	●
		M90 - APKT10 - D20Z3M10	0552	20	3	-	30		M10	-	18	●
		M90 - APKT10 - D25Z3M12	0553	25	3	-	35		M12	-	21	●
		M90 - APKT10 - D32Z4M16	0554	32	4	-	35		M16	-	29	●
		M90 - APKT10 - D40Z5M16	0555	40	5	-	43		M16	-	29	●
		M90 - APKT10 - D42Z5M16	0556	42	5	-	43		M16	-	29	●

* Clamping Torque (Nm) 1.2Nm

APKT10	Screw (Cutter D16~D20)	Screw (Cutter D20~)	Wrench
Description	TP072505	TP072506	TPWFTP07
EDP	18000016	18000013	18000001