Milling - Shoulder Milling - Cutter

Cutters for APKT

Entering Angle : 90°
2 Corner Positive

<S> Shellmill

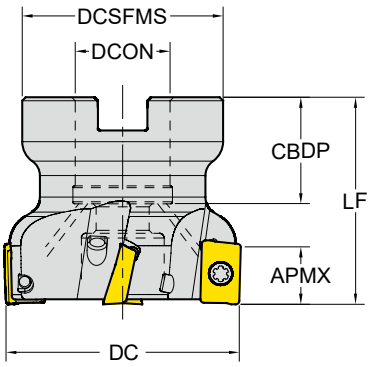

<W> Weldon

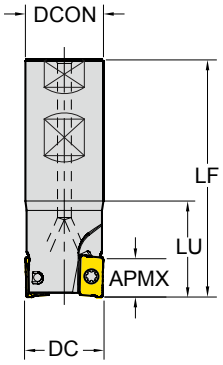

<C> Cylindrical

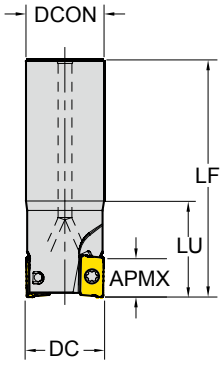

CICT : Number of Inserts
CBDP : Connection Bore Depth

: Refer to p. 171

Unit:mm

Series	APMX	Designation	EDP 1700..	DC	CICT	LU	LF	TYPE	DCON /TDZ	CBDP	DCSFMS	
APKT 1604	14.0	E90 - APKT16 - D25Z2C20 - L100	0091	25	2	-	100	Cylindrical	20	-	-	●
		E90 - APKT16 - D25Z2C20 - L100 - WOC	0243	25	2	35	100		20	-	-	X
		E90 - APKT16 - D25Z2C25 - L250 - WOC	0557	25	2	100	250		25	-	-	X
		E90 - APKT16 - D32Z2C32 - L250 - WOC	0558	32	2	100	250		32	-	-	X
		E90 - APKT16 - D32Z3C25 - L110	0094	32	3	-	110		25	-	-	●
		E90 - APKT16 - D32Z3C25 - L200	0559	32	3	40	200		25	-	-	●
		E90 - APKT16 - D32Z3C32 - L150 - WOC	0250	32	3	50	150		32	-	-	X
		E90 - APKT16 - D32Z3C32 - L250 - WOC	0560	32	3	100	250		32	-	-	X
		E90 - APKT16 - D40Z4C32 - L150 - WOC	0561	40	4	40	150		32	-	-	X
		E90 - APKT16 - D25Z2W25 - L100	0562	25	2	35	100	Weldon	25	-	-	●
		E90 - APKT16 - D25Z2W25 - L110	0092	25	2	-	110		25	-	-	●
		E90 - APKT16 - D28Z3W25 - L100	0563	28	3	40	100		25	-	-	●
		E90 - APKT16 - D30Z3W25 - L110	0564	30	3	40	110		25	-	-	●
		E90 - APKT16 - D32Z3W25 - L110	0093	32	3	-	110		25	-	-	●
		E90 - APKT16 - D32Z3W32 - L110	0565	32	3	40	110		32	-	-	●
		E90 - APKT16 - D36Z3W32 - L110	0566	36	3	40	110		32	-	-	●

▶ NEXT PAGE

* Clamping Torque (Nm) 3.0Nm

APKT16	Screw	Wrench
Description	TP154008	TPWFTP15
EDP	18000006	18000003