Milling - Face Milling - Cutter

Cutters for OFER

Entering Angle : 43°
8 Corner Positive

<S> Shellmill

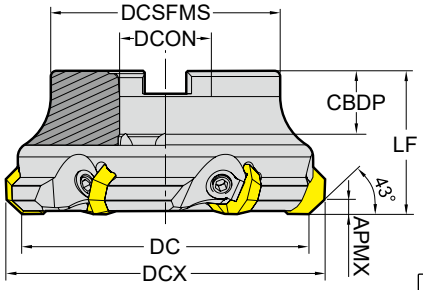

CICT : Number of Inserts
CBDP : Connection Bore Depth

: Refer to p. 179

Unit : mm

Series	APMX	Designation	EDP 1700..	DC	DCX	CICT	LF	TYPE	DCON	CBDP	DCSFMS	
OFER 0704	5.0	F43 - OFER07 - D63Z4S22 - WOC	0484	63	75	4	45	Shellmill	22	22	48	X
		F43 - OFER07 - D80Z5S27 - WOC	0485	80	92	5	50		27	25	58	X
		F43 - OFER07 - D100Z6S32 - WOC	0486	100	112	6	50		32	26	80	X
		F43 - OFER07 - D125Z8S40 - WOC	0487	125	137	8	63		40	32	85	X
		F43 - OFER07 - D160Z9S40 - WOC	0488	160	172	9	63		40	32	110	X

Fig. 1

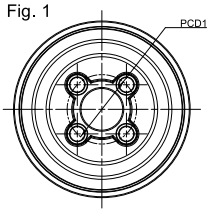

Fig. 2

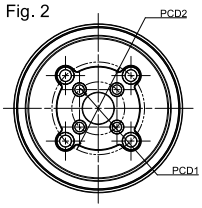

DC	PCD1	Fig.
Ø160	Ø66.7	1
Ø200/250	Ø101.6	1
	Ø101.6	1

OFER07	Screw	Wrench	Wedge Clamp
Description	YAKV-15-M8x1x20	YAAL-05-4	YACK-11
EDP	18000086	18000062	18000068

Milling - Face Milling - Cutter

Cutters for ODMT, ODMW

Entering Angle : 45°
8 Corner Positive

<S> Shellmill

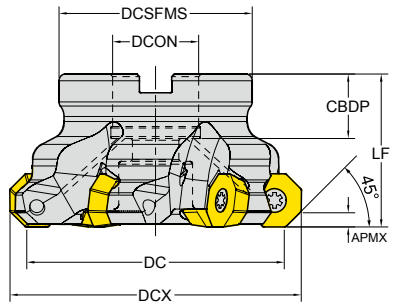

CICT : Number of Inserts
CBDP : Connection Bore Depth

: Refer to p. 178

Unit : mm

Series	APMX	Designation	EDP 1700..	DC	DCX	CICT	LF	TYPE	DCON	CBDP	DCSFMS	
ODMT ODMW 0605	3.5	F43 - ODMT06 - D63Z5S22	0001	63	73	5	40	Shellmill	22	20	50	●
		F43 - ODMT06 - D80Z6S27	0002	80	90	6	50		27	23	56	●
		F43 - ODMT06 - D100Z7S32	0003	100	110	7	50		32	26	78	●
		F43 - ODMT06 - D125Z8S40	0004	125	135	8	63		40	28	89	●

* Clamping Torque (Nm) 5.3Nm

ODMT06	Screw	Wrench
Description	TP205013	TPWFTP20
EDP	18000007	18000004