Milling - Face Milling - Cutter

Cutters for ONMU

Entering Angle: 45°
16 Corner Negative

<S> Shellmill

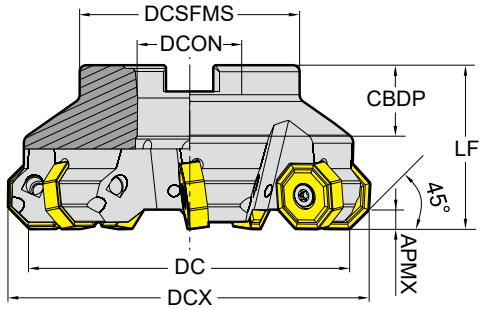

CICT : Number of Inserts
CBDP : Connection Bore Depth

: Refer to p. 180

Unit:mm

Series	APMX	Designation	EDP 1700..	DC	DCX	CICT	LF	TYPE	DCON	CBDP	DCSFMS	
ONMU 0806	5.5	F45 - ONMU08 - D63Z5S22	0493	63	75	5	40	Shellmill	22	22	49	●
		F45 - ONMU08 - D80Z6S27	0494	80	92	6	50		27	25	58	●
		F45 - ONMU08 - D100Z7S32	0495	100	112	7	50		32	26	67	●
		F45 - ONMU08 - D125Z8S40 - WOC	0496	125	137	8	63		40	32	87	X
		F45 - ONMU08 - D160Z10S40 - WOC	0497	160	172	10	63		40	32	107	X
		F45 - ONMU08 - D200Z12S60 - WOC	0498	200	212	12	63		60	40	130	X
		F45 - ONMU08 - D315Z16S60 - WOC	0499	315	327	16	63		60	40	220	X

▶ ONHU is Available for Wiper Insert

Fig. 1

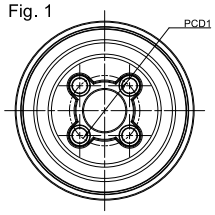

Fig. 2

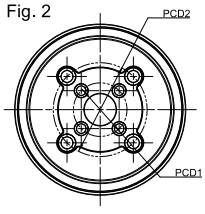

DC	DCON	PCD1	PCD2	Fig.
Ø160	Ø40	Ø66.7	-	1
Ø200/250	Ø47.625	Ø101.6	-	1
	Ø60	Ø101.6	-	1
Ø315	Ø60	Ø101.6	Ø177.8	2
	Ø47.625	Ø101.6	Ø177.8	2

* Clamping Torque (Nm) 5.3Nm

ONMU08	Screw	Wrench
Description	TP205013	TPWFTP20
EDP	18000007	18000004