Cutters for PNMU

Entering Angle : 36°
10 Corner Negative

<S> Shellmill

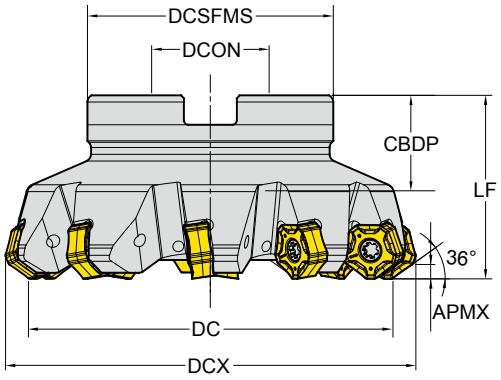

CICT : Number of Inserts
CBDP : Connection Bore Depth

: Refer to p. 181

Unit:mm

Series	APMX	Designation	EDP 1700..	DC	DCX	CICT	LF	TYPE	DCON	CBDP	DCSFMS	
PNMU 1206	4.0	F36 - PNMU12 - D50Z4S22	0774	50	63.6	4	40	Shellmill	22	20	42	●
		F36 - PNMU12 - D50Z5S22	0785	50	63.6	5	40		22	20	42	●
		F36 - PNMU12 - D63Z5S22	0775	63	76.6	5	40		22	20	48	●
		F36 - PNMU12 - D63Z6S22	0483	63	76.6	6	40		22	20	48	●
		F36 - PNMU12 - D80Z8S27	0466	80	93.6	8	50		27	23	58	●
		F36 - PNMU12 - D100Z10S32	0467	100	113.6	10	50		32	26	67	●
		F36 - PNMU12 - D125Z10S40	0786	125	138.6	10	63		40	29	89	●

* Clamping Torque (Nm) 3.0Nm

PNMU12	Screw	Wrench	Handle	BIT
Description	TP154008	TPWBTP15	DH-H4	DB-TP15
EDP	18000006	18000217	18000189	18000208