Milling - Profiling - Cutter

Cutters for RDKT, RDKW

Round Positive

<S> Shellmill

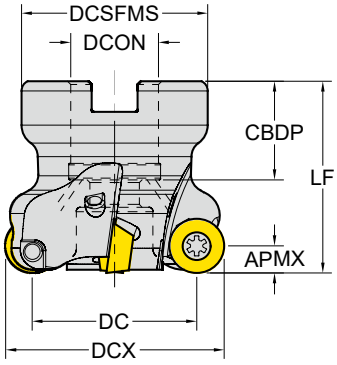

<W> Weldon

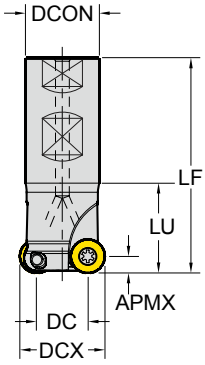

<C> Cylindrical

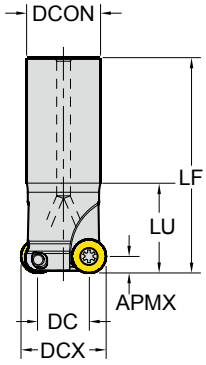

<M> Modular

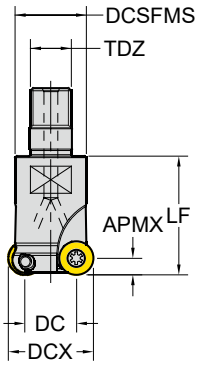

CICT : Number of Inserts
CBDP : Connection Bore Depth

: Refer to p. 182

Unit :mm

Series	APMX	Designation	EDP 1700..	DC	DCX	CICT	LU	LF	TYPE	DCON /TDZ	CBDP	DCSFMS	
RDKT RDKW 0802	4.0	E - RDKT08 - D16Z2C16 - L160	0005	8	16	2	-	160	Cylindrical	16	-	-	●
		E - RDKT08 - D20Z2C20 - L180	0007	12	20	2	-	180		20	-	-	●
		E - RDKT08 - D25Z3C20 - L180	0009	17	25	3	-	180		20	-	-	●
		M - RDKT08 - D16Z2M08	0010	8	16	2	-	23	Modular	M08	-	13	●
		M - RDKT08 - D20Z2M10	0011	12	20	2	-	30		M10	-	18	●
		M - RDKT08 - D25Z3M12	0012	17	25	3	-	35		M12	-	21	●
RDKT RDKW 10T3	5.0	E - RDKT10 - D20Z2C20 - L150 - WOC	0576	10	20	2	60	150	Cylindrical	20	-	-	X
		E - RDKT10 - D20Z2C20 - L180	0013	10	20	2	-	180		20	-	-	●
		E - RDKT10 - D25Z2C25 - L150 - WOC	0299	15	25	2	60	150		25	-	-	X
		E - RDKT10 - D25Z2C25 - L180	0015	15	25	2	-	180		25	-	-	●
		E - RDKT10 - D20Z2W20 - L150 - WOC	0577	10	20	2	60	150	Weldon	20	-	-	X
		E - RDKT10 - D25Z2W25 - L150 - WOC	0578	15	25	2	60	150		25	-	-	X
		E - RDKT10 - D32Z3W32 - L150 - WOC	0579	22	32	3	60	150		32	-	-	X
		F - RDKT10 - D40Z5S16	0019	30	40	5	-	40	Shellmill	16	18	34	●
		F - RDKT10 - D50Z5S22	0580	40	50	5	-	50		22	22	42	●
		F - RDKT10 - D50Z6S22	0020	40	50	6	-	50		22	22	42	●
		F - RDKT10 - D63Z6S22	0581	53	63	6	-	50		22	22	48	●
		M - RDKT10 - D20Z2M10	0017	10	20	2	-	30	Modular	M10	-	18	●
		M - RDKT10 - D25Z3M12	0018	15	25	3	-	35		M12	-	21	●

* Clamping Torque (Nm) 1.2Nm

RDKT08	Screw	Wrench
Description	TP082505	TPWFTP08
EDP	18000008	18000002

* Clamping Torque (Nm) 3.0Nm

RDKT10	Screw	Wrench
Description	TP154008RD	TPWFTP15
EDP	18000017	18000003