Milling - Profiling - Cutter

Cutters for RDKT, RDKW

Round Positive

<S> Shellmill

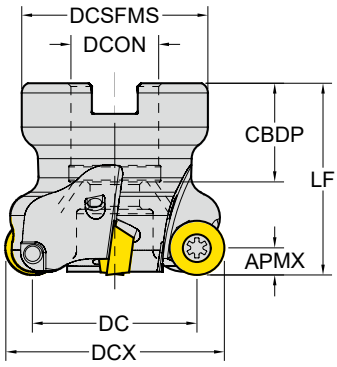

<W> Weldon

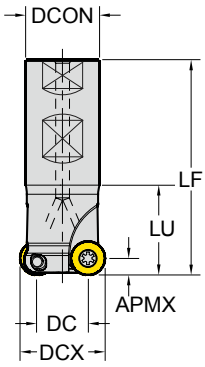

<C> Cylindrical

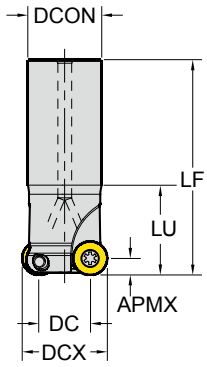

<M> Modular

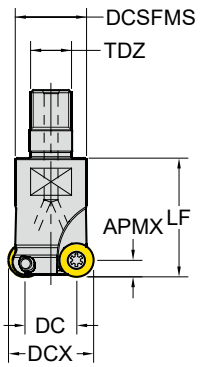

CICT : Number of Inserts
CBDP : Connection Bore Depth

: Refer to p. 182

Unit :mm

Series	APMX	Designation	EDP 1700..	DC	DCX	CICT	LU	LF	TYPE	DCON /TDZ	CBDP	DCSFMS	
RDKT RDKW 1204	6.0	E - RDKT12 - D25Z2C25 - L180	0021	13	25	2	80	180	Cylindrical	25	-	-	●
		E - RDKT12 - D32Z2C32 - L200	0023	20	32	2	60	200		32	-	-	●
		E - RDKT12 - D32Z3C32 - L160	0024	20	32	3	60	160		32	-	-	●
		E - RDKT12 - D32Z3C32 - L160 - WOC	0582	20	32	3	70	160		32	-	-	X
		E - RDKT12 - D33Z3C32 - L160 - WOC	0583	21	33	3	70	160		32	-	-	X
		E - RDKT12 - D32Z3W32 - L160 - WOC	0584	20	32	3	50	160	Weldon	32	-	-	X
		F - RDKT12 - D40Z4S16	0028	28	40	4	-	40	Shellmill	16	18	32	●
		F - RDKT12 - D50Z5S22	0029	38	50	5	-	50		22	20	40	●
		F - RDKT12 - D52Z5S22	0585	40	52	5	-	50		22	22	42	●
		F - RDKT12 - D63Z6S22	0030	51	63	6	-	50		22	20	48	●
		F - RDKT12 - D80Z7S27	0586	68	80	7	-	50		27	25	58	●
		F - RDKT12 - D100Z7S32	0587	88	100	7	-	50		32	26	65	●
		F - RDKT12 - D100Z8S32	0588	88	100	8	-	50		32	26	65	●
		M - RDKT12 - D25Z2M12	0026	13	25	2	-	35	Modular	M12	-	21	●
		M - RDKT12 - D32Z3M16	0027	20	32	3	-	42		M16	-	29	●
		M - RDKT12 - D42Z4M16	0589	30	42	4	-	43		M16	-	29	●

* Clamping Torque (Nm) 3.0Nm

RDKT12	Screw	Wrench	Wedge Clamp
Description	TP154009	TPWFTP15	MTCA - 130813P
EDP	18000010	18000003	18000037

phone:+82-32-526-0909, www.yg1.solutions, E-mail: yg1@yg1.solutions
YG-1 CO., LTD.