Milling - Face Milling - Cutter

Cutters for SPCN, SPKN, SPKR

Entering Angle : 75°
4 Corner Positive ISO

<S> Shellmill

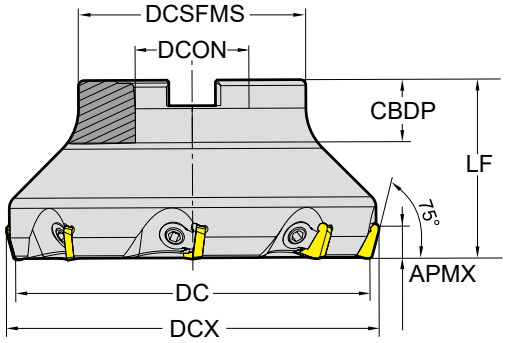

CICT : Number of Inserts
CBDP : Connection Bore Depth

: Refer to p. 194

Unit:mm

Series	APMX	Designation	EDP 1700..	DC	DCX	CICT	LF	TYPE	DCON	CBDP	DCSFMS	
SPCN SPKN SPKR 1203	8.0	F75 - SPKN12 - D50Z4S22 - WOC	0611	50	56	4	42	Shellmill	22	22	42	X
		F75 - SPKN12 - D63Z5S22 - WOC	0612	63	69	5	40		22	22	48	X
		F75 - SPKN12 - D80Z6S27 - WOC	0613	80	86	6	50		27	25	58	X
		F75 - SPKN12 - D100Z7S32 - WOC	0614	100	106	7	50		32	26	65	X
		F75 - SPKN12 - D125Z8S40 - WOC	0615	125	131	8	63		40	32	80	X
		F75 - SPKN12 - D160Z9S40 - WOC	0616	160	166	9	63		40	32	110	X
		F75 - SPKN12 - D200Z12S60 - WOC	0617	200	206	12	63		60	40	130	X

Fig. 1

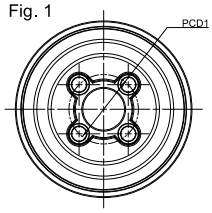

Fig. 2

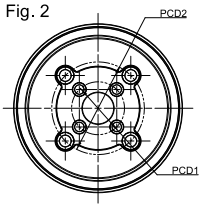

DC	PCD1	Fig.
Ø160	Ø66.7	1
Ø200/250	Ø101.6	1
	Ø101.6	1

SPKN1203	Screw	Wrench	Wedge Clamp
Description	YAKV-22-M8x1x14	YAAL-05-4	YACK-10
EDP	18000089	18000062	18000067
Description	YAKV-13-M8x1x16	-	-
EDP	18000084	-	-