Milling - Shoulder Milling - Cutter

Cutters for TPCN, TPKN, TPKR

Entering Angle : 90°
3 Corner Positive ISO

<S> Shellmill

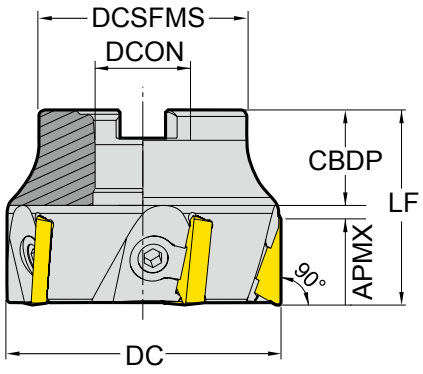

CICT : Number of Inserts
CBDP : Connection Bore Depth

: Refer to p. 199

Unit:mm

Series	APMX	Designation	EDP 1700..	DC	CICT	LU	LF	TYPE	DCON	CBDP	DCSFMS	
TPCN TPKN TPKR 1603	12.0	F90 - TPKN16 - D50Z4S22 - WOC	0618	50	4	-	40	Shellmill	22	22	42	X
		F90 - TPKN16 - D63Z6S22 - WOC	0619	63	6	-	45		22	22	48	X
		F90 - TPKN16 - D80Z7S27 - WOC	0620	80	7	-	50		27	25	58	X
		F90 - TPKN16 - D125Z8S40 - WOC	0621	125	8	-	63		40	32	80	X
TPCN TPKN TPKR 2204	18.0	F90 - TPKN22 - D63Z5S22 - WOC	0622	63	5	-	45	Shellmill	22	22	48	X
		F90 - TPKN22 - D80Z6S27 - WOC	0623	80	6	-	50		27	25	58	X
		F90 - TPKN22 - D100Z7S32 - WOC	0624	100	7	-	50		32	26	65	X
		F90 - TPKN22 - D125Z8S40 - WOC	0625	125	8	-	63		40	32	80	X
		F90 - TPKN22 - D160Z9S40 - WOC	0626	160	9	-	63		40	32	110	X
		F90 - TPKN22 - D200Z12S60 - WOC	0627	200	12	-	63		60	40	130	X
		F90 - TPKN22 - D250Z15S60 - WOC	0628	250	15	-	63		60	40	160	X
		F90 - TPKN22 - D315Z18S60 - WOC	0629	315	18	-	63		60	40	220	X

Fig. 1

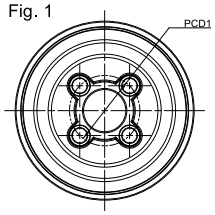

Fig. 2

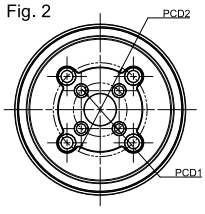

DC	DCON	PCD1	PCD2	Fig.
Ø160	Ø40	Ø66.7	-	1
Ø200/250	Ø47.625	Ø101.6	-	1
	Ø60	Ø101.6	-	1
Ø315	Ø60	Ø101.6	Ø177.8	2
	Ø47.625	Ø101.6	Ø177.8	2

TPKN16	Screw	Wrench	Wedge Clamp
Description	YAKV-13-M8x1x16	YAAL-05-4	YACK-10
EDP	18000084	18000062	18000067

TPKN22	Screw	Wrench	Wedge Clamp
Description	YAKV-14-M8x1x18	YAAL-05-4	YACK-11
EDP	18000085	18000062	18000068