Milling - Shoulder Milling - Cutter

Cutters for TPKT

Entering Angle : 90°
3 Corner Positive

<S> Shellmill

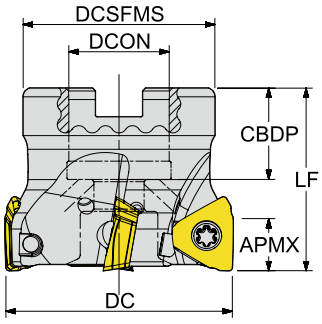

<C> Cylindrical

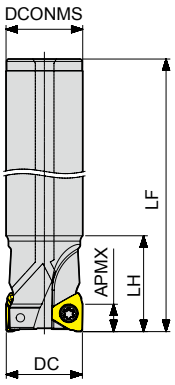

<W> Weldon

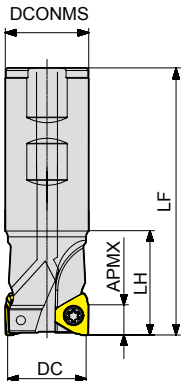

CICT : Number of Inserts
CBDP : Connection Bore Depth

: Refer to p. 197-198

Unit : mm

Series	APMX	Designation	EDP 1700..	DC	CICT	LF	TYPE	DCON	LH	CBDP	DCSFMS	
NEW TPKT 0703	4.5	E90 - TP07 - D12Z1C12 - L80	1136	12	1	80	Cylinderical	12	20	-	-	●
		E90 - TP07 - D14Z1C12 - L80	1137	14	1	80		12	20	-	-	●
		E90 - TP07 - D16Z2C16 - L110	1138	16	2	110		16	25	-	-	●
		E90 - TP07 - D16Z2C16 - L150	1139	16	2	150		16	25	-	-	●
		E90 - TP07 - D16Z3C16 - L150	1140	16	3	150		16	25	-	-	●
		E90 - TP07 - D17Z3C16 - L150	1141	17	3	150		16	25	-	-	●
		E90 - TP07 - D18Z3C16 - L150	1142	18	3	150		16	25	-	-	●
		E90 - TP07 - D20Z3C20 - L160	1143	20	3	160		20	25	-	-	●
		E90 - TP07 - D25Z5C25 - L115	1146	25	5	115		25	25	-	-	●
		E90 - TP07 - D42Z8C32 - L130	1161	42	8	130		32	30	-	-	●
		E90 - TP07 - D25Z4W20 - L115	1144	25	4	115	Weldon	20	25	-	-	●
		E90 - TP07 - D25Z5W25 - L115	1145	25	5	115		25	25	-	-	●
		E90 - TP07 - D32Z6W25 - L130	1147	32	6	130		25	30	-	-	●
		E90 - TP07 - D40Z8W32 - L130	1148	40	8	130		32	30	-	-	●
		F90 - TP07 - D32Z6S16	1149	32	6	32	Shellmill	16	-	18	30	●
		F90 - TP07 - D35Z7S16	1150	35	7	35		16	-	18	30	●
		F90 - TP07 - D40Z7S16	1151	40	7	40		16	-	18	38	●
		F90 - TP07 - D40Z8S16	1152	40	8	40		16	-	18	38	●
		F90 - TP07 - D40Z8S22	1153	40	8	40		22	-	20	38	●
		F90 - TP07 - D50Z9S22	1162	50	9	40		22	-	20	45	●
		F90 - TP07 - D52Z9S22	1163	52	9	40		22	-	20	45	●

▶ NEXT PAGE

* Clamping Torque (Nm) 0.6Nm

TPKT0703	Screw	Wrench	Handle	BIT
Description	TP062004-GS	TPWBTP06	DH-H4	DB-TP06
EDP	18000252	18000277	18000189	18000274