Milling - Shoulder Milling - Cutter

Cutters for TPKT

Entering Angle : 90°
3 Corner Positive

<S> Shellmill

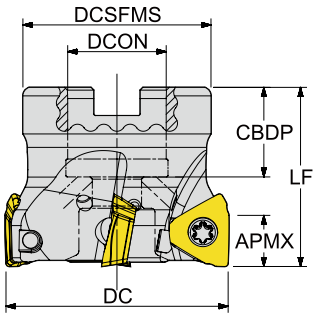

<M> Modular

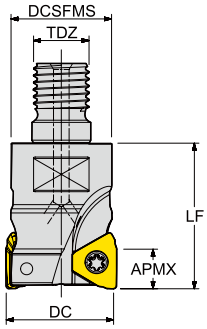

CICT : Number of Inserts
CBDP : Connection Bore Depth

: Refer to p. 197-198

Unit :mm

Series	APMX	Designation	EDP 1700..	DC	CICT	LF	TYPE	DCON /TDZ	LH	CBDP	DCSFMS	
TPKT 1104	7.0	F90 - TP11 - D40Z5S16	1050	40	5	40	Shellmill	16	-	20	38	●
		F90 - TP11 - D50Z6S22	1051	50	6	40		22	-	20	42	●
		F90 - TP11 - D63Z7S22	1052	63	7	40		22	-	20	48	●
		F90 - TP11 - D63Z8S22	1053	63	8	40		22	-	20	48	●
		M90 - TP11 - D32Z4M16	1095	32	4	43	Modular	M16	68	-	29	●

* Clamping Torque (Nm) 1.2Nm

TPKT1104 (D20, D21)	Screw	Wrench	Handle	BIT
Description	TP082562-GS	TPWBTP08	DH-H4	DB-TP08
EDP	18000265	18000218	18000189	18000190

TPKT1104 (over D25)	Screw	Wrench	Handle	BIT
Description	TP082506-GS	TPWBTP08	DH-H4	DB-TP08
EDP	18000259	18000218	18000189	18000190